M95 Series Slotting Mills

M95 slotting cutters are ideal for deeper applications that require the cutting load to be shared from one insert to the other. They provide groove widths from 4–10mm and cutter diameters from 100–200mm as well as an economical way to achieve balanced cutting.

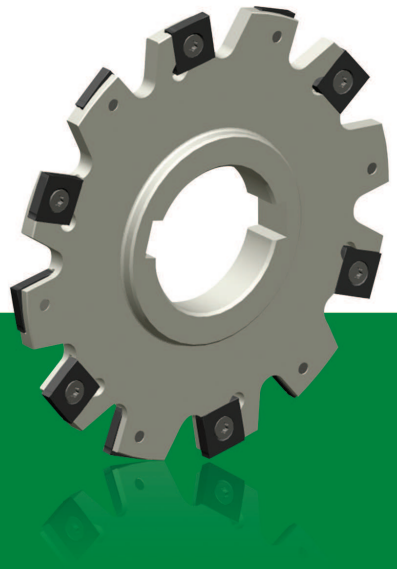

M95

Features and Benefits

- Cutters available in arbour mount.
- Inserts with four indexes.
- Staggered key ways in mounting bore, used for multiple ganged cutters.
- Slot width 4–10mm.
- Three insert geometries available; SNHX in 11 and 12mm iC.
- Requires only one spare part.
- Economical to use.
- Available in Latest WIDIA™ Victory™ Grade.

Slotting Mills

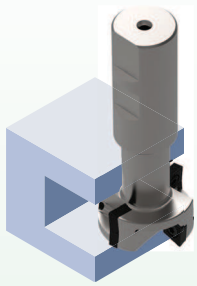

M95

Slot Width Range:
4–10mm

Indexes per insert: 4
Diameter: 100–200mm

Pages: L18–L21

P
M
K

Insert Offering

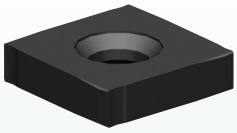

SNHX

Inserts with free-cutting geometry providing low cutting forces.

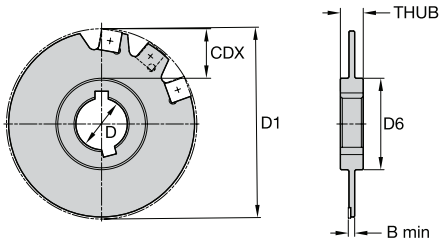

M95

order number	catalogue number	D1	D	D6	B min	CDX	THUB	Z	Z S	coolant supply	kg
2016502	12299510400	100	27	48	4	26,0	12,0	12	6	No	0,3
2016514	12299515500	100	27	48	5	26,0	12,0	12	6	No	0,3
2016516	12299515600	100	27	48	6	26,0	12,0	10	5	No	0,3
2016518	12299515700	100	27	48	7	26,0	12,0	9	3	No	0,3
2016520	12299515800	100	27	48	8	26,0	12,0	9	3	No	0,4
2016524	12299520400	125	40	58	4	91,5	12,0	14	7	No	0,4
2016526	12299525500	125	40	58	5	91,5	12,0	14	7	No	0,4
2016528	12299525600	125	40	58	6	91,5	12,0	12	6	No	0,5
2016530	12299525700	125	40	58	7	91,5	12,0	12	4	No	0,5
2016532	12299525800	125	40	58	8	91,5	12,0	12	4	No	0,6
2016544	12299526000	125	40	58	10	91,5	12,0	12	6	No	0,6
2016547	12299530400	160	40	68	4	114,0	12,0	18	9	No	0,7
2022648	12299535500	160	40	68	5	114,0	12,0	18	9	No	0,7
2016551	12299535600	160	40	68	6	114,0	12,0	16	8	No	1,0
2016555	12299535800	160	40	68	8	114,0	12,0	15	5	No	1,1
2022650	12299536000	160	40	68	10	114,0	12,0	16	8	No	1,2
2016562	12299546000	200	22	72	10	136,0	12,0	18	9	No	1,9
2022652	12299545800	200	50	72	8	136,0	12,0	18	6	No	1,6

Spare Parts

D1	insert screw	Nm	wrench	bushing
100	12147548500	1,2	170.023	–
100	12147562300	1,2	170.023	12147676800
100	12147548600	5,0	170.025	12147676900
125	12147548500	1,2	170.023	–
125	12147562300	1,2	170.023	12147676800
125	12147548600	5,0	170.025	12147676900
125	12147572400	5,0	170.025	12147677000
160	12147548500	1,2	170.023	–
160	12147562300	1,2	170.023	12147676800
160	12147548600	5,0	170.025	12147676900
160	12147572400	5,0	170.025	12147677000
200	12147548600	5,0	170.025	12147676900
200	12147572400	5,0	170.025	12147677000

Insert Selection Guide

Material Group	Light Machining		General Purpose		Heavy Machining	
	Geometry	Grade	Geometry	Grade	Geometry	Grade
P1–P2	SNHX	WP40PM	**SNHX**	**WP40PM**	SNHX	WP40PM
P3–P4	SNHX	WP35CM	**SNHX**	**WP35CM**	SNHX	WP35CM
P5–P6	SNHX	WP35CM	**SNHX**	**WP35CM**	SNHX	WP35CM
M1–M2	SNHX	WP40PM	**SNHX**	**WP40PM**	SNHX	WP40PM
M3	SNHX	WP35CM	**SNHX**	**WP35CM**	SNHX	WP35CM
K1–K2	SNHX	WK15CM	**SNHX**	**WK15CM**	SNHX	WK15CM
K3	SNHX	WP35CM	**SNHX**	**WP35CM**	SNHX	WP35CM
N1–N2	–	–	–	–	–	–
N3	–	–	–	–	–	–
S1–S2	–	–	–	–	–	–
S3	–	–	–	–	–	–
S4	–	–	–	–	–	–
H1	–	–	–	–	–	–

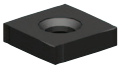

SNHX

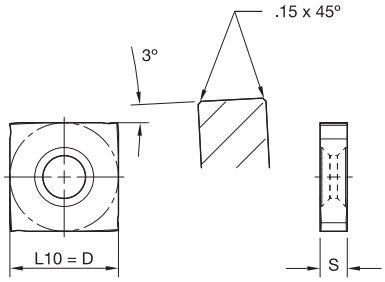

P		●	●
M		○	●
K	●	○	
N			
S			○
H			

● first choice
○ alternate choice

SNHX • 12,7mm iC

catalogue number	cutting edges	D	L10	S	hm	WK15CM	WP35CM	WP40PM
123506601	4	12,70	12,70	3,18	0,08	5903650	5903674	5903646

SNHX • 11mm iC

catalogue number	cutting edges	D	L10	S	hm	WK15CM	WP35CM	WP40PM
123506599	4	11,00	11,00	2,38	0,08	5903648	5903672	5903644

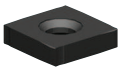

SNHX

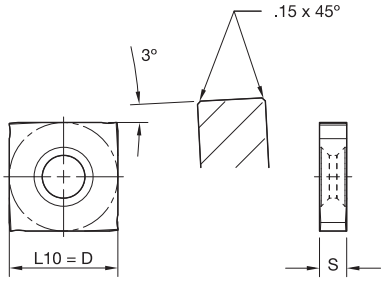

P		●	●
M		○	●
K	●	○	
N			
S			○
H			

● first choice
○ alternate choice

SNHX • 11mm iC

catalogue number	cutting edges	D	L10	S	hm	WK15CM	WP35CM	WP40PM
123506600	4	11,00	11,00	2,70	0,08	5903649	5903673	5903645

SNHX • 12,7mm iC

catalogue number	cutting edges	D	L10	S	hm	WK15CM	WP35CM	WP40PM
123506602	4	12,70	12,70	5,40	0,08	5903671	5903675	5903647

Recommended Starting Speeds [m/min]

Material Group		WK15CM			WP35CM			WP40PM		
P	0	–	–	–	455	**395**	370	295	**260**	245
	1	–	–	–	455	**395**	370	295	**260**	245
	2	–	–	–	280	**255**	230	250	**215**	180
	3	–	–	–	255	**230**	205	230	**195**	160
	4	–	–	–	190	**175**	160	205	**170**	135
	5	–	–	–	260	**230**	210	170	**155**	135
	6	–	–	–	160	**135**	110	150	**115**	90
M	1	–	–	–	205	**185**	155	195	**170**	155
	2	–	–	–	185	**160**	140	175	**150**	125
	3	–	–	–	145	**130**	115	130	**115**	90
K	1	420	**385**	340	295	**265**	240	–	–	–
	2	335	**295**	275	235	**210**	190	–	–	–
	3	280	**250**	230	195	**175**	160	–	–	–
N	1	–	–	–	–	–	–	–	–	–
	2	–	–	–	–	–	–	–	–	–
	3	–	–	–	–	–	–	–	–	–
S	1	–	–	–	–	–	–	–	–	–
	2	–	–	–	–	–	–	–	–	–
	3	–	–	–	–	–	–	–	–	–
	4	–	–	–	66	**50**	33	–	–	–
H	1	–	–	–	–	–	–	–	–	–
	2	–	–	–	–	–	–	–	–	–
	3	–	–	–	–	–	–	–	–	–

*NOTE: FIRST choice starting speeds are in **bold** type.*
As the average chip thickness increases, the speed should be decreased.

Recommended Starting Feeds

Recommended Starting Feeds [mm]

Light Machining	General Purpose	Heavy Machining

Insert Geometry	Programmed Feed per Tooth (fz) as a % of Radial Depth of Cut (ae)															Insert Geometry
	5%			10%			20%			30%			40–100%			
SNHX	0,12	**0,28**	0,71	0,08	**0,20**	0,51	0,06	**0,15**	0,38	0,06	**0,13**	0,33	0,05	**0,12**	0,30	SNHX

NOTE: Use "Light Machining" value as starting feed rate.

WIDIA™ M900™ Series • Adjustable Slotting Cutters

The WIDIA M900 Series is a multipurpose slotting cutter with high-precision capability for numerous operations. The cutter is one of the most productive of its kind for slotting and for cut-off operations. Two keyways in the cutter provide wide slot options by mounting several cutters together in a gang-slotting style operation.

Features

- Insert geometries and grades for various workpiece materials.
- Easy setting for desired width.
- Superior cartridge sliding mechanism.
- Available in arbour and shell mount.
- Two keyways for staggered slotting.
- Strong, reliable pocket seat.

M900

Benefits

- Wide range of slot width options.
- High accuracy of slots.
- Security/stability of cartridge cutter.
- Wide range of mounting options.
- Multiple slots by gang slotting.

Application

- Full slotting.
- Half slotting (left and right styles).
- Gang slotting.
- Shoulder milling.
- Face milling.
- Back face milling.

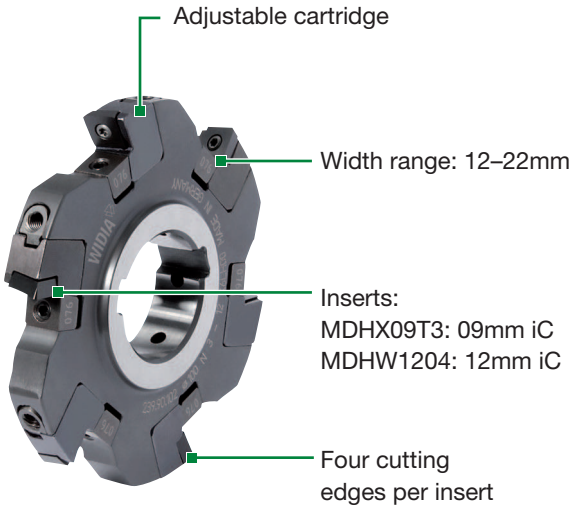

Slotting Mills

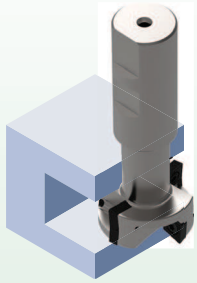

M900™

Slot Width Range:
12–22mm

Indexes per insert: 2
Diameter: 100–315mm

Pages: L24–L30,
L32–L33

Insert Offering

MDHX Geometry
iC 09mm

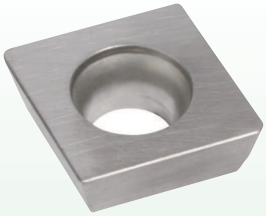

MDHW Geometry
iC 12mm

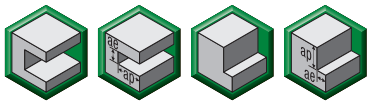

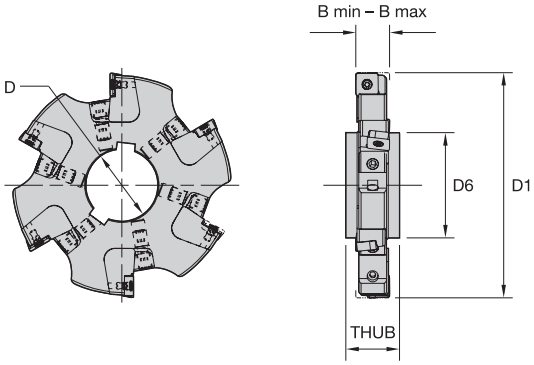

Arbour Mount • 9mm

order number	catalogue number	D1	D	D6	B min	B max	THUB	Z	max RPM	coolant supply	kg
2003598	12399010200	100	32	48	12	14	16,0	6	7070	No	0,5
2067540	12399011400	100	32	48	14	16	16,0	6	7070	No	0,8
2003695	12399010400	125	40	58	12	14	16,0	8	6370	No	0,8
2003696	12399011600	125	40	58	14	16	16,0	8	6370	No	0,9
2003697	12399012800	125	40	58	16	18	20,0	8	6370	No	1,1
2003796	12399011800	160	40	58	14	16	16,0	10	5600	No	1,6
2003797	12399013000	160	40	58	16	18	20,0	10	5600	No	1,9
2065591	12399010800	200	50	72	12	14	16,0	12	5040	No	2,1
2003879	12399012000	200	50	72	14	16	16,0	12	5040	No	2,6
2003880	12399013200	200	50	72	16	18	20,0	12	5040	No	2,9
2067541	12399013400	250	50	72	16	18	20,0	16	4480	No	7,0
2116241	12399013600	315	60	84	16	18	20,0	20	3990	No	7,6

Spare Parts

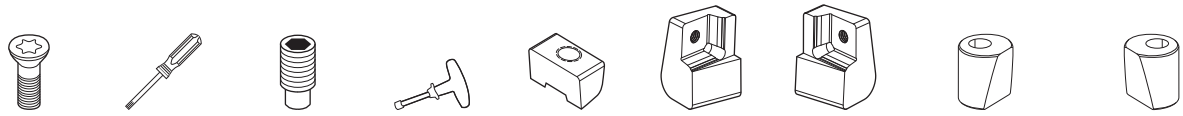

D1	insert screw	Torx driver	STC screw	T-handle hex wrench	clamp wedge	cartridge left-hand	cartridge right-hand	adjusting wedge left-hand	adjusting wedge right-hand
100	12148067200	12749726100	12148574100	12148050000	12748307600	12748210100	12748210200	12748551100	12748551200
100	12148067200	12749726100	12148574100	12148050000	12748307600	12748210300	12748210400	12748551100	12748551200
125	12148067200	12749726100	12148574100	12148050000	12748307600	12748210100	12748210200	12748551100	12748551200
125	12148067200	12749726100	12148574100	12148050000	12748307600	12748210300	12748210400	12748551100	12748551200
125	12148067200	12749726100	12148574100	12148050000	12748307700	12748210500	12748210600	12748551100	12748551200
160	12148067200	12749726100	12148574100	12148050000	12748307600	12748210300	12748210400	12748551100	12748551200
160	12148067200	12749726100	12148574100	12148050000	12748307700	12748210500	12748210600	12748551100	12748551200
200	12148067200	12749726100	12148574100	12148050000	12748307600	12748210100	12748210200	12748551100	12748551200
200	12148067200	12749726100	12148574100	12148050000	12748307600	12748210300	12748210400	12748551100	12748551200
200	12148067200	12749726100	12148574100	12148050000	12748307700	12748210500	12748210600	12748551100	12748551200
250	12148067200	12749726100	12148574100	12148050000	12748307700	12748210500	12748210600	12748551100	12748551200
315	12148067200	12749726100	12148574100	12148050000	12748307700	12748210500	12748210600	12748551100	12748551200

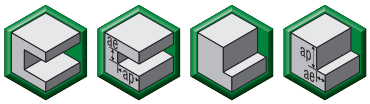

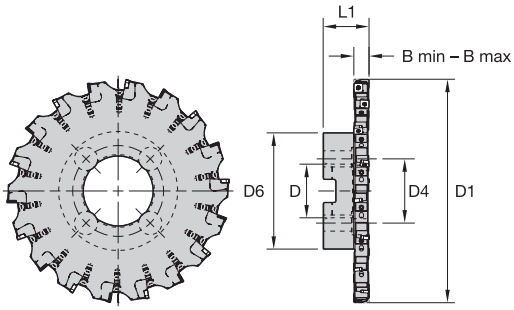

Shell Mount • 9mm

order number	catalogue number	D1	D	D4	D6	B min	B max	L1	Z	max RPM	coolant supply	kg
2003602	12399111400	100	27	–	48	14	16	33,0	6	7070	No	0,8
2003700	12399110400	125	32	–	58	12	14	37,0	8	6370	No	1,1
2003701	12399111600	125	32	–	58	14	16	37,0	8	6370	No	1,2
2003702	12399112800	125	32	–	58	16	18	37,0	8	6370	No	1,4
2003800	12399110600	160	40	–	70	12	14	42,0	10	5600	No	1,8
2003801	12399111800	160	40	–	70	14	16	42,0	10	5600	No	2,1
2003802	12399113000	160	40	–	70	16	18	42,0	10	5600	No	2,3
2003897	12399110800	200	40	67	90	12	14	44,0	12	5040	No	3,0
2003898	12399112000	200	40	67	90	14	16	44,0	12	5040	No	3,3
2003899	12399113200	200	40	67	90	16	18	44,0	12	5040	No	3,7
2003997	12399113400	250	60	102	130	16	18	50,0	16	4480	No	7,0
2004095	12399113600	315	60	102	130	16	18	50,0	20	3990	No	9,7

Spare Parts

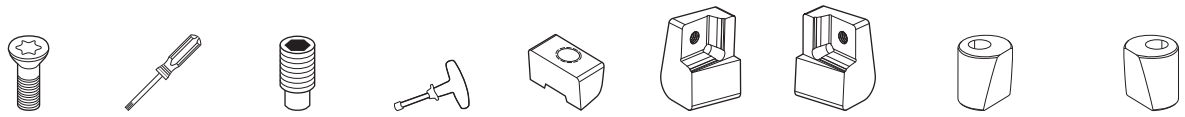

D1	insert screw	Torx driver	STC screw	T-handle hex wrench	clamp wedge	cartridge left-hand	cartridge right-hand	adjusting wedge left-hand	adjusting wedge right-hand
125	12148067200	12749726100	12148574100	12148050000	12748307600	12748210100	12748210200	12748551100	12748551200
100	12148067200	12749726100	12148574100	12148050000	12748307600	12748210300	12748210400	12748551100	12748551200
125	12148067200	12749726100	12148574100	12148050000	12748307600	12748210100	12748210200	12748551100	12748551200
125	12148067200	12749726100	12148574100	12148050000	12748307700	12748210500	12748210600	12748551100	12748551200
160	12148067200	12749726100	12148574100	12148050000	12748307600	12748210100	12748210200	12748551100	12748551200
160	12148067200	12749726100	12148574100	12148050000	12748307600	12748210300	12748210400	12748551100	12748551200
160	12148067200	12749726100	12148574100	12148050000	12748307700	12748210500	12748210600	12748551100	12748551200
200	12148067200	12749726100	12148574100	12148050000	12748307600	12748210100	12748210200	12748551100	12748551200
200	12148067200	12749726100	12148574100	12148050000	12748307600	12748210300	12748210400	12748551100	12748551200
200	12148067200	12749726100	12148574100	12148050000	12748307700	12748210500	12748210600	12748551100	12748551200
250	12148067200	12749726100	12148574100	12148050000	12748307700	12748210500	12748210600	12748551100	12748551200
315	12148067200	12749726100	12148574100	12148050000	12748307700	12748210500	12748210600	12748551100	12748551200

Insert Selection Guide

Material Group	Light Machining		General Purpose		Heavy Machining	
	Geometry	Grade	Geometry	Grade	Geometry	Grade
P1–P2	MDHX	WP40PM	**MDHX**	**WP40PM**	MDHX	WP40PM
P3–P4	MDHX	WP35CM	**MDHX**	**WP35CM**	MDHX	WP35CM
P5–P6	MDHX	WP35CM	**MDHX**	**WP40PM**	MDHX	WU35PM
M1–M2	MDHX	WP25PM	**MDHX**	**WP25PM**	MDHX	WU35PM
M3	MDHX	WP35CM	**MDHX**	**WP40PM**	MDHX	WU35PM
K1–K2	MDHX	WK15CM	**MDHX**	**WK15CM**	MDHX	WK15CM
K3	MDHX	WK15CM	**MDHX**	**WP35CM**	MDHX	WP35CM
N1–N2	–	–	**–**	**–**	–	–
N3	–	–	**–**	**–**	–	–
S1–S2	MDHX	WP25PM	**MDHX**	**WU35PM**	MDHX	WU35PM
S3	MDHX	WU35PM	**MDHX**	**WU35PM**	MDHX	WU35PM
S4	MDHX	WP25PM	**MDHX**	**WU35PM**	MDHX	WU35PM
H1	–	–	**–**	**–**	–	–

Inserts • MDH..

MDHX

MDHX

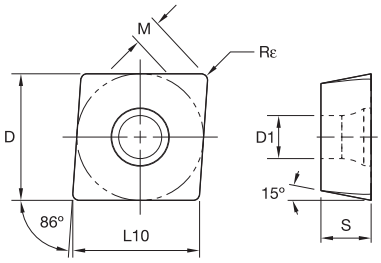

● first choice
○ alternate choice

		WK15CM	WP25PM	WU35PM	WP35CM	WP40PM
P			●	●	●	●
M			●	●	○	●
K		●	○		○	
N						
S			●	●		○
H			○			

MDHX

catalogue number	cutting edges	D	D1	L10	M	S	Rε	WK15CM	WP25PM	WU35PM	WP35CM	WP40PM
MDHX09T308	2	9,53	3,40	9,55	1,85	3,97	0,80	5903706	5903722	5903710	5903708	5903704

Recommended Starting Feeds

Recommended Starting Feeds [mm]

Light Machining	General Purpose	Heavy Machining

Insert Geometry	Programmed Feed per Tooth (fz) as a % of Radial Depth of Cut (ae)															Insert Geometry
	5%			10%			20%			30%			40–100%			
MDHX	0,12	**0,23**	0,46	0,08	**0,17**	0,33	0,06	**0,13**	0,25	0,06	**0,11**	0,22	0,05	**0,10**	0,20	MDHX

NOTE: Use "Light Machining" value as starting feed rate.

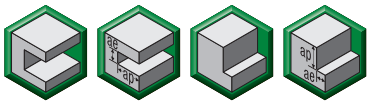

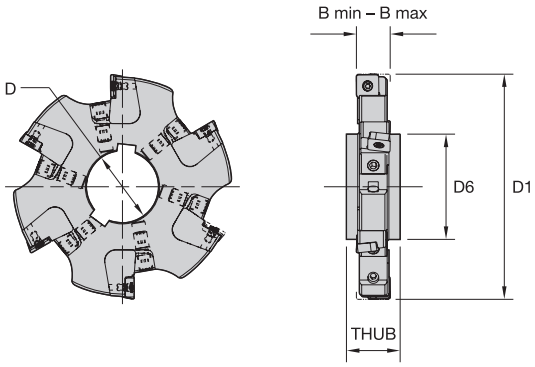

Arbour Mount • 12mm

order number	catalogue number	D1	D	D6	B min	B max	THUB	Z	max RPM	coolant supply	kg
2003881	**12399014400**	200	50	72	18	20	20,0	12	5040	No	3,2
2003882	**12399015600**	200	50	72	20	22	24,0	12	3990	No	3,7
2003993	**12399014600**	250	50	72	18	20	20,0	16	4480	No	5,1
2003994	**12399015800**	250	50	72	20	22	24,0	16	3570	No	5,9
2004081	**12399014800**	315	60	84	18	20	20,0	20	3990	No	8,1
2004082	**12399016000**	315	60	84	20	22	24,0	20	3220	No	9,4

Spare Parts

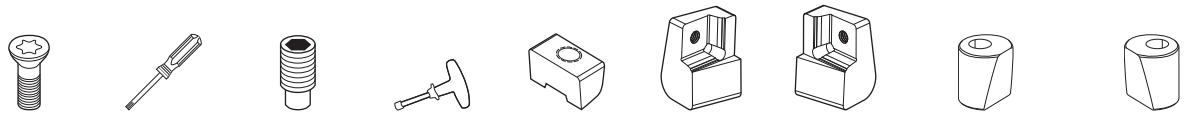

D1	insert screw	Torx driver	STC screw	T-handle hex wrench	clamp wedge	cartridge left-hand	cartridge right-hand	adjusting wedge left-hand	adjusting wedge right-hand
200	**12748605300**	**12749723200**	**12148574100**	**12148050000**	**12748307700**	**12748210700**	**12748210800**	**12748551100**	**12748551200**
200	**12748605300**	**12749723200**	**12148574100**	**12148050000**	**12748307800**	**12748210900**	**12748211000**	**12748551100**	**12748551200**
250	**12748605300**	**12749723200**	**12148574100**	**12148050000**	**12748307700**	**12748210700**	**12748210800**	**12748551100**	**12748551200**
250	**12748605300**	**12749723200**	**12148574100**	**12148050000**	**12748307800**	**12748210900**	**12748211000**	**12748551100**	**12748551200**
315	**12748605300**	**12749723200**	**12148574100**	**12148050000**	**12748307700**	**12748210700**	**12748210800**	**12748551100**	**12748551200**
315	**12748605300**	**12749723200**	**12148574100**	**12148050000**	**12748307800**	**12748210900**	**12748211000**	**12748551100**	**12748551200**

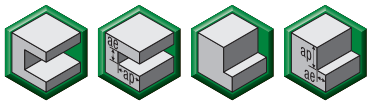

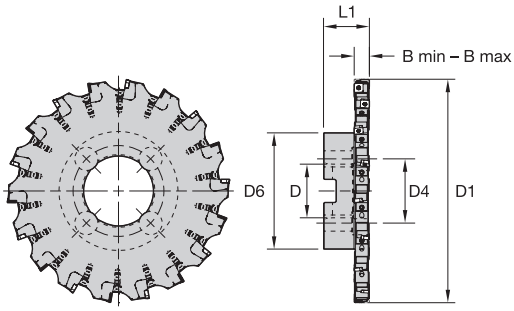

Shell Mount • 12mm

order number	catalogue number	D1	D	D4	D6	B min	B max	L1	Z	max RPM	coolant supply	kg
2003900	**12399114400**	200	40	67	90	18	20	44,8	12	5040	No	3,8
2003901	**12399115600**	200	40	67	90	20	22	46,0	12	3990	No	4,3
2003998	**12399114600**	250	60	102	130	18	20	51,8	16	4480	No	7,2
2003999	**12399115800**	250	60	102	130	20	22	53,0	16	3570	No	7,9
2004096	**12399114800**	315	60	102	130	18	20	51,8	20	3990	No	10,2
2004097	**12399116000**	315	60	102	130	20	22	53,0	20	3220	No	11,3

Spare Parts

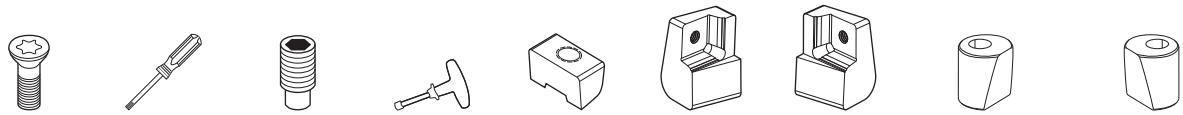

D1	insert screw	Torx driver	STC screw	T-handle hex wrench	clamp wedge	cartridge left-hand	cartridge right-hand	adjusting wedge left-hand	adjusting wedge right-hand
200	**12748605300**	**12749723200**	**12148574100**	**12148050000**	**12748307700**	**12748210700**	**12748210800**	**12748551100**	**12748551200**
200	**12748605300**	**12749723200**	**12148574100**	**12148050000**	**12748307800**	**12748210900**	**12748211000**	**12748551100**	**12748551200**
250	**12748605300**	**12749723200**	**12148574100**	**12148050000**	**12748307700**	**12748210700**	**12748210800**	**12748551100**	**12748551200**
250	**12748605300**	**12749723200**	**12148574100**	**12148050000**	**12748307800**	**12748210900**	**12748211000**	**12748551100**	**12748551200**
315	**12748605300**	**12749723200**	**12148574100**	**12148050000**	**12748307700**	**12748210700**	**12748210800**	**12748551100**	**12748551200**
315	**12748605300**	**12749723200**	**12148574100**	**12148050000**	**12748307800**	**12748210900**	**12748211000**	**12748551100**	**12748551200**

Insert Selection Guide

Material Group	Light Machining		General Purpose		Heavy Machining	
	Geometry	Grade	Geometry	Grade	Geometry	Grade
P1–P2	MDHW	WP40PM	**MDHW**	**WP40PM**	MDHW	WP40PM
P3–P4	MDHW	WP35CM	**MDHW**	**WP35CM**	MDHW	WP35CM
P5–P6	MDHW	WP35CM	**MDHW**	**WP40PM**	MDHW	WU35PM
M1–M2	MDHW	WP25PM	**MDHW**	**WP25PM**	MDHW	WU35PM
M3	MDHW	WP35CM	**MDHW**	**WP40PM**	MDHW	WU35PM
K1–K2	MDHW	WK15CM	**MDHW**	**WK15CM**	MDHW	WK15CM
K3	MDHW	WK15CM	**MDHW**	**WP35CM**	MDHW	WP35CM
N1–N2	–	–	**–**	**–**	–	–
N3	–	–	**–**	**–**	–	–
S1–S2	MDHW	WP25PM	**MDHW**	**WU35PM**	MDHW	WU35PM
S3	MDHW	WU35PM	**MDHW**	**WU35PM**	MDHW	WU35PM
S4	MDHW	WP25PM	**MDHW**	**WU35PM**	MDHW	WU35PM
H1	–	–	**–**	**–**	–	–

Inserts • MDH..

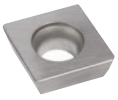
MDHW

MDHW

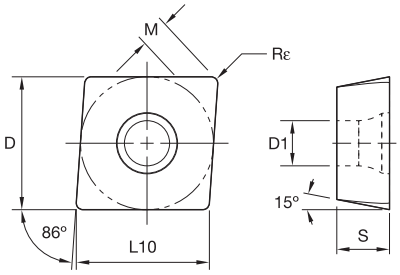

● first choice
○ alternate choice

P			●	●	●	●
M			●	●	○	●
K		●	○		○	
N						
S			●	●		○
H			○			

MDHW

catalogue number	cutting edges	D	D1	L10	M	S	Rε	WK15CM	WP25PM	WU35PM	WP35CM	WP40PM
MDHW120408	2	12,70	5,50	12,73	2,58	4,76	0,80	5903707	5903723	5903721	5903709	5903705

Recommended Starting Speeds [m/min]

Material Group		WK15CM			WP25PM			WU35PM			WP35CM			WP40PM		
P	0	–	**–**	–	330	**285**	270	260	**230**	215	455	**395**	370	295	**260**	245
	1	–	**–**	–	330	**285**	270	260	**230**	215	455	**395**	370	295	**260**	245
	2	–	**–**	–	275	**240**	200	220	**190**	160	280	**255**	230	250	**215**	180
	3	–	**–**	–	255	**215**	175	200	**170**	140	255	**230**	205	230	**195**	160
	4	–	**–**	–	225	**185**	150	180	**150**	120	190	**175**	160	205	**170**	135
	5	–	**–**	–	185	**170**	150	150	**135**	120	260	**230**	210	170	**155**	135
	6	–	**–**	–	165	**125**	100	130	**100**	80	160	**135**	110	150	**115**	90
M	1	–	**–**	–	205	**180**	165	170	**150**	135	205	**185**	155	195	**170**	155
	2	–	**–**	–	185	**160**	130	155	**130**	110	185	**160**	140	175	**150**	125
	3	–	**–**	–	140	**120**	95	115	**100**	80	145	**130**	115	130	**115**	90
K	1	420	**385**	340	230	**205**	185	–	**–**	–	295	**265**	240	–	**–**	–
	2	335	**295**	275	180	**160**	150	–	**–**	–	235	**210**	190	–	**–**	–
	3	280	**250**	230	150	**135**	120	–	**–**	–	195	**175**	160	–	**–**	–
N	1	–	**–**	–	–	**–**	–	–	**–**	–	–	**–**	–	–	**–**	–
	2	–	**–**	–	–	**–**	–	–	**–**	–	–	**–**	–	–	**–**	–
	3	–	**–**	–	–	**–**	–	–	**–**	–	–	**–**	–	–	**–**	–
S	1	–	**–**	–	40	**35**	25	35	**30**	25	–	**–**	–	40	**35**	30
	2	–	**–**	–	40	**35**	25	35	**30**	25	–	**–**	–	40	**35**	30
	3	–	**–**	–	50	**40**	25	45	**35**	25	–	**–**	–	50	**40**	30
	4	–	**–**	–	70	**50**	35	60	**45**	30	66	**50**	33	65	**50**	35
H	1	–	**–**	–	–	**–**	–	–	**–**	–	–	**–**	–	–	**–**	–
	2	–	**–**	–	–	**–**	–	–	**–**	–	–	**–**	–	–	**–**	–
	3	–	**–**	–	–	**–**	–	–	**–**	–	–	**–**	–	–	**–**	–

*NOTE: FIRST choice starting speeds are in **bold** type.*
As the average chip thickness increases, the speed should be decreased.

Recommended Starting Feeds

Recommended Starting Feeds [mm]

Light Machining	General Purpose	Heavy Machining

Insert Geometry	Programmed Feed per Tooth (fz) as a % of Radial Depth of Cut (ae)															Insert Geometry
	5%			10%			20%			30%			40–100%			
MDHW	0,12	**0,23**	0,46	0,08	**0,17**	0,33	0,06	**0,13**	0,25	0,06	**0,11**	0,22	0,05	**0,10**	0,20	MDHW

NOTE: Use "Light Machining" value as starting feed rate.

Assembly and Operating Instructions

1. General

The runout tolerance of the milling cutter has a decisive effect on the quality of workpieces and the life cycle of tools. Proper tool fitting and the precise axial setting of the milling insert are essential for a successful application and optimum results. One key requirement for assembly and setting work is that all components are clean. Bearing surfaces must be free from grease, and only the threads of indexable insert clamping screws and double threaded screws of clamping and adjusting wedges should be lubricated with copper grease. The indexable inserts should be inserted in the cleaned insert seats so that they are positioned correctly on the bearing surfaces. The indexable insert clamping screws should be tightened with the specified torque.

2. Exploded Diagram of Spare Parts

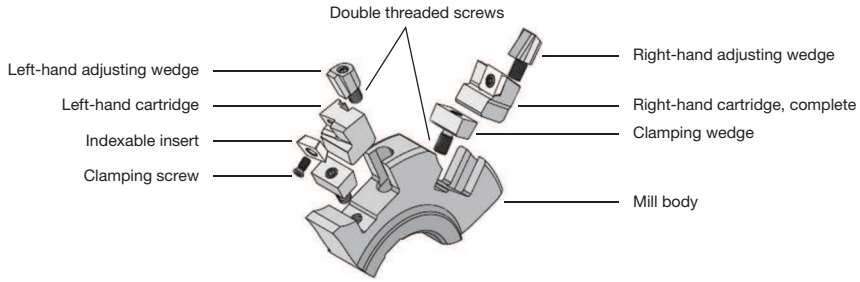

3. Mounting the Cartridges in the Mill Body

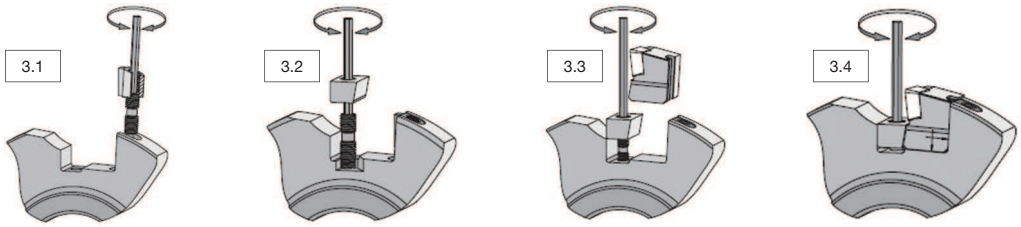

3.1 Turn double threaded screw one turn clockwise in the adjusting wedge. Then insert both parts in the slot in the mill body and turn the double threaded screw clockwise until the adjusting wedge is flush with the milling cutter.

3.2 Turn double threaded screw three turns clockwise in the mill body. Then mount the clamping wedge on the double threaded screw and screw both parts together until the lower edge of the clamping wedge is at the same height as the chip space runout.

3.3 Push the top of the fully assembled cartridge into the mill body using the rear bearing surface of the milling cutter so that the cartridge slot makes contact with the adjusting wedge spring. Ensure a perfect axial/radial surface.

3.4 Secure the correctly positioned cartridge by tightening the clamping wedge with a preset torque of MApre = 1 Nm to set the runout or cutting width.

4. Setting the Runout for Milling Cutters with 2–3 Cutting Edges

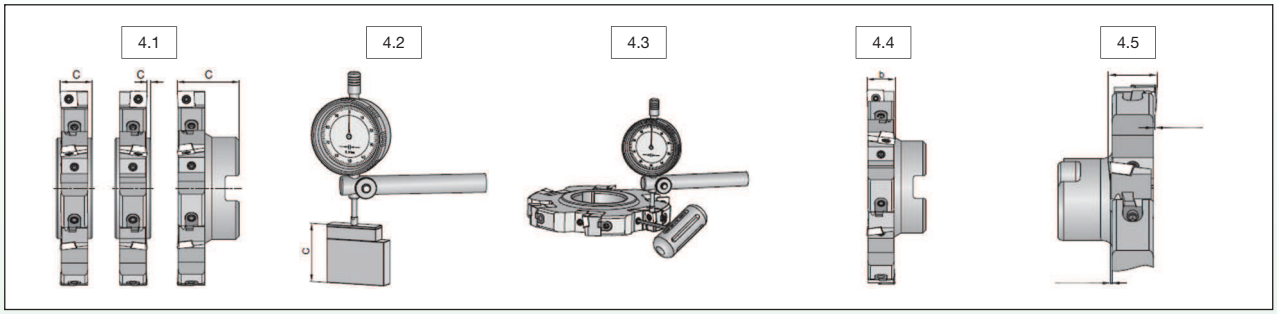

4.1 Possible interpretations of the measuring dimension C.

4.2 Set gage to desired measurement C using gage blocks set to 0.

4.3 Set cartridge to ~0,1mm before final measurement. Clamping wedge is tightened with torque MApre = 1 Nm. Then briefly loosen clamping wedge and tighten again.

4.4 Set cartridge to 0,02mm before final measurement. Then briefly loosen clamping wedge so that the contact surfaces can level out. Tighten clamping.

4.4 Wedge again with torque MApre = 1 Nm.

4.5 Adjust cartridge to final measurement. Tighten clamping wedge with torque MA = 4 Nm. Check runout of the fully adjusted milling cutter.

5. Setting the Runout for Milling Cutters with 3 Cutting Edges

The cutting widths for milling cutters with three cutting edges are set using purpose-designed optical tool presetting equipment. Note that the projection of the cartridges from the mill body must be almost exactly the same on both sides. The sequence of steps required for setting the cartridge is identical to those for tools with two cutting edges.

ATTENTION:

At each tool adjustment, the body, cartridges, indexable inserts, and spare parts must be checked and replaced if necessary. Before each tool use, the clamping and double threaded screws must be tightened with the specified torque. The tools must only be used in accordance with their function. We accept no liability for their improper use. Changes of any kind and/or printing errors are not valid grounds for claims.